ARCH HARDWARE

STRAIGHT TRASH CHUTE WITH DRIP EDGE

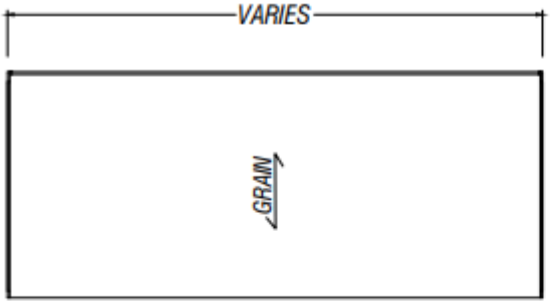

TOP VIEW

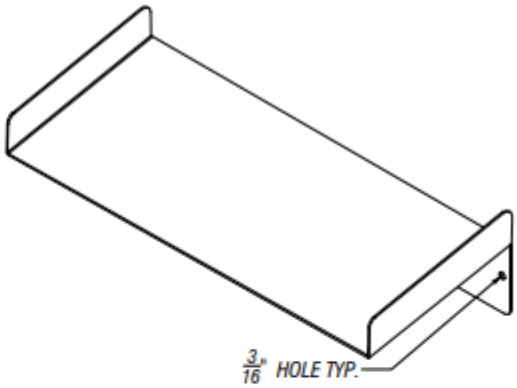

ISOMETRIC VIEW

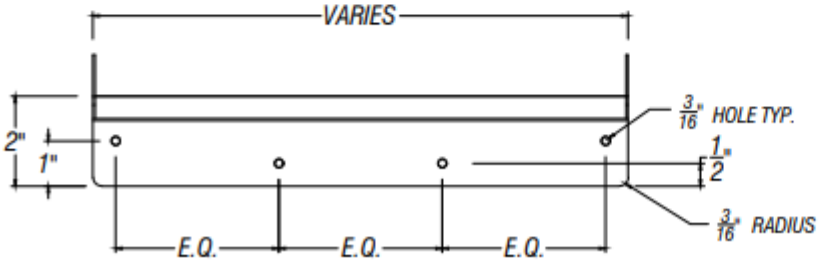

FRONT VIEW

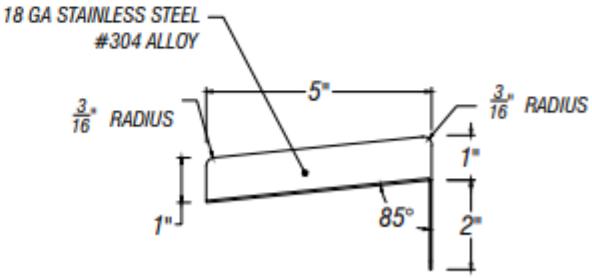

SIDE VIEW

PART #	FINISH	SIZE	MATERIAL
R55-1078	Satin (#4 brush)	10 7/8" X 5" X 3"	Stainless Steel #304 alloy
R55-1178		11 7/8" X 5" X 3"	
R55-1378		13 7/8" X 5" X 3"	
R55-1478		14 7/8" X 5" X 3"	
R55-1578		15 7/8" X 5" X 3"	
R55-1778		17 7/8" X 5" X 3"	
R55-1978		19 7/8" X 5" X 3"	
R55-2378		23 7/8" X 5" X 3"	

Phone
(800)-679-2614

Email
webstore@archhardware.net

Address
303 Maler Rd., Sealy, TX 77474